Subject Code: R161113/R16 **Set No – 1**

I B. Tech I Semester Regular Examinations, December – 2016
ENGINEERING DRAWING
(Com. to ECE, EIE, E.Com.E)

Time: 3 hours **Max. Marks: 70**

Question Paper Consists of Part-A and Part-B
Answering the question in Part-A is Compulsory
Four Questions should be answered from Part-B
****

PART-A

1. (a) Draw an equilateral triangle of 75mm side and inscribe a circle in it. Draw the projections of the figure, when its plane is vertical and inclined at 30^0 to the VP and one of its sides of the triangle is inclined at 45^0 to the HP. [6]

   (b) Draw the isometric view: [8]

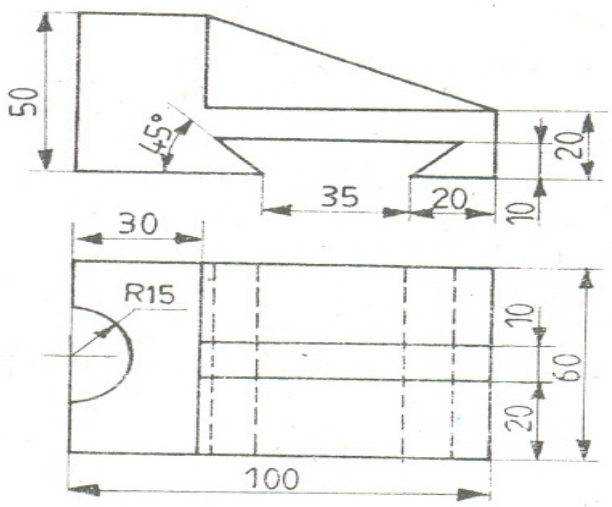

PART-B

2. (a) Describe a regular pentagon about a circle of 100mm diameter. [7]

   (b) A fixed point F is 7.5cm from a fixed straight line. Draw the locus of a point P moving in such a way that its distance from the fixed straight line is equal to its distance from F. Name the curve. Draw normal and tangent at a point 6cm from F. [7]

Subject Code: R161113/R16 **Set No – 1**

3. (a) A point P is 20 mm below HP and lies in the third quadrant. Its shortest distance from xy is 40mm. Draw its projections. [7]

   (b) Construct a scale of 1.5 inches =1 foot to show inches and long enough to measure up to 4 feet. [7]

4. A line AB is 75mm long. A is 50mm in front of VP and 15mm above HP. B is 15mm in front of VP and is above HP. Top view of AB is 50mm long. Find the front view length and the true inclinations. [14]

5. A circular plate of negligible thickness and 50mm diameter appears as an ellipse in the front view, having its major axis 50mm long and minor axis 30mm long. Draw its top view when the major axis of the ellipse is horizontal. [14]

6. Draw the projections of a pentagonal prism, base 25mm side and axis 50mm long, resting on one of its rectangular faces on the HP with the axis inclined at 45^0 to the VP. [14]

7. Draw (i) Front View (ii) Top View (iii) Side View [14]

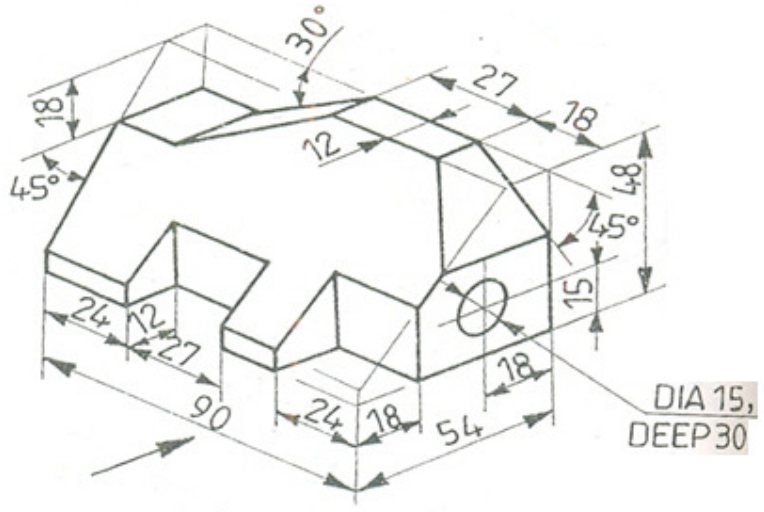

Subject Code: R161113/R16 **Set No – 2**

I B. Tech I Semester Regular Examinations, December – 2016
ENGINEERING DRAWING
(Com. to ECE, EIE, E.Com.E)

Time: 3 hours **Max. Marks: 70**

Question Paper Consists of Part-A and Part-B
Answering the question in Part-A is Compulsory
Four Questions should be answered from Part-B
****

PART-A

1. (a) Draw a rhombus of diagonals 100mm and 60mm long, with the longer diagonal horizontal. The figure is the top view of a square of 100mm long diagonals, with a corner on the ground. Draw its front view and determine the angle which its surface makes with the ground. [5]

   (b) Draw (i) Front View (ii) Top View (iii) Side View [9]

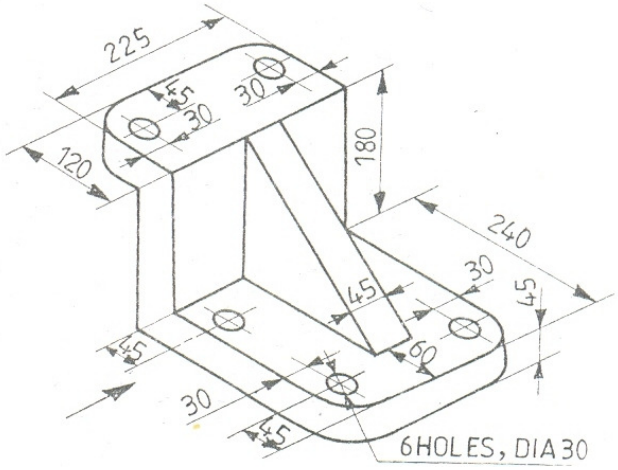

PART-B

2. (a) Construct an ellipse when the distance between the focus and the directrix is 30mm and the eccentricity is ¾. Draw the tangent and normal at any point P on the curve using directrix. [8]

   (b) Construct a regular polygon of any number of sides, given the length of its sides equal to 25mm. [6]

Subject Code: R161113/R16 **Set No – 2**

3. (a) Draw a vernier scale of R.F=1/25 to read centimetres up to 4 meters and on it, show lengths representing 2.39m and 0.91m. [7]

   (b) Two points A and B are in the HP. The point A is 30mm in front of the VP; while B is behind the VP. The distance between their projectors is 75mm and the line joining their top views makes an angle 45^0 with xy. Find the distance of the point B from the VP. [7]

4. The end A of a line AB is in the HP and 25mm behind the VP. The end B is in the VP and 50mm above the HP. The distance between the end projectors is 75mm. Draw the projections of AB and determine its true length, traces and inclinations with the two planes. [14]

5. A thin 30^0-60^0 set square has its longest edge in the VP and inclined at 30^0 to the HP. Its surface makes an angle of 45^0 with the VP. Draw the projections. [14]

6. Draw the projections of a cylinder 75mm diameter and 100 mm long, lying on the ground with its axis inclined at 30^0 to the VP and parallel to the ground. [14]

7. Draw the isometric view: [14]

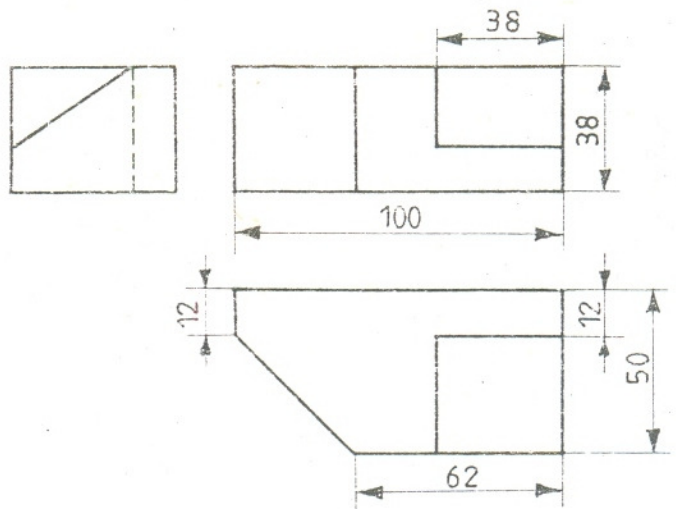

Subject Code: R161113/R16 **Set No – 3**

I B. Tech I Semester Regular Examinations, Dec – 2016
ENGINEERING DRAWING
(Com. to ECE, EIE, E.Com.E)

Time: 3 hours **Max. Marks: 70**

Question Paper Consists of Part-A and Part-B
Answering the question in Part-A is Compulsory
Four Questions should be answered from Part-B
****

PART-A

1. (a) Draw the projections of a circle of 50mm diameter resting in the HP on a point A on the circumference, its plane inclined at 45^0 to the HP and (i) the top view of the diameter AB making 30^0angle with the VP [7]

   (b) Draw the isometric view: [7]

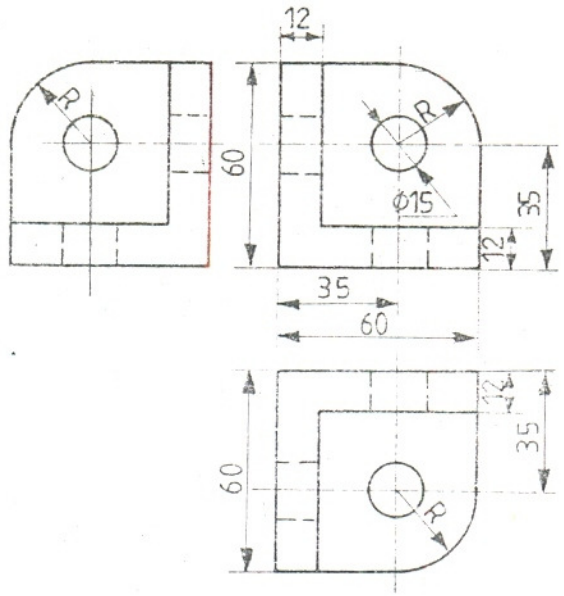

PART-B

2. (a) The vertex of a hyperbola is 65mm from its focus. Draw the curve if the eccentricity is 3/2. Draw a normal and a tangent at a point on the curve, 75mm from the directrix. [7]

   (b) Construct a regular octagon in a square of 75mm side. [7]

Subject Code: R161113/R16 **Set No – 3**

3. (a) Draw the projections of the following points on the same ground line, keeping the projectors 25mm apart.
   (i) A in the HP and 20mm behind the VP
   (ii) B, 40mm above the HP; and 25mm in front of the VP
   (iii) C, 25mm below the HP; and 25mm behind the VP
   (iv) D, 15mm above the HP; and 50mm behind the VP [8]
   (b) Draw a diagonal scale of R.F=1/32 showing yards, feet and inches to measure up to 4 yards. [6]

4. Two oranges on a tree are respectively 1.8m and 3m above the ground, and 1.2m and 2.1m from a 0.3m thick wall, but on the opposite sides of it. The distance between the oranges, measured along the ground and parallel to the wall is 2.7m. Determine the real distance between the oranges. [14]

5. A semi circular plate of 80mm diameter has its straight edge in the VP and inclined at 45^0 to the HP. The surface of the plate makes an angle of 30^0 with the VP. Draw its projections. [14]

6. A hexagonal pyramid, base 25mm side and axis 50mm long, has an edge of its base on the ground. Its axis is inclined at 30^0 to the ground and parallel to the VP. Draw its projections. [14]

7. Draw (i) Front View (ii) Top View (iii) Side View: [14]

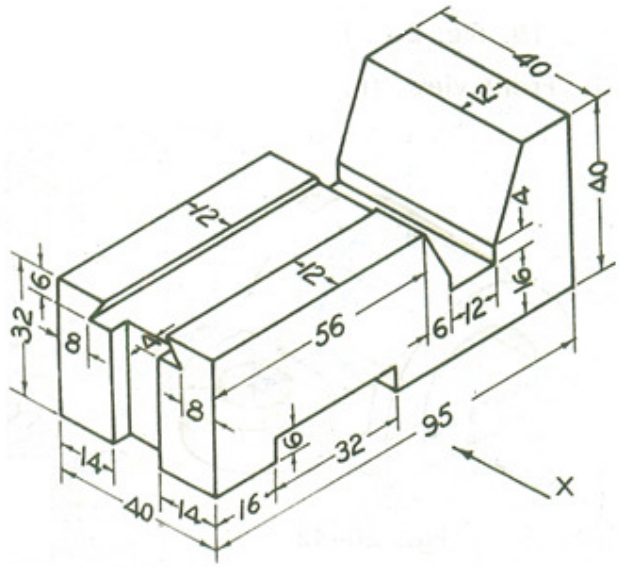

Subject Code: R161113/R16 **Set No – 4**

I B. Tech I Semester Regular Examinations, Dec – 2016
ENGINEERING DRAWING
(Com. to ECE, EIE, E.Com.E)

Time: 3 hours **Max. Marks: 70**

Question Paper Consists of Part-A and Part-B
Answering the question in Part-A is Compulsory
Four Questions should be answered from Part-B
****

PART-A

1. (a) A composite plate of negligible thickness is made up of a rectangle 60mm x 40mm, and a semi circle on its longer side, Draw the projections when the longer side is parallel to the HP and inclined at 45^0 to the VP the surface of the plate making 30^0 angle with the HP. [7]
   (b) Draw (i) Front View (ii) Top View (iii) Side View [7]

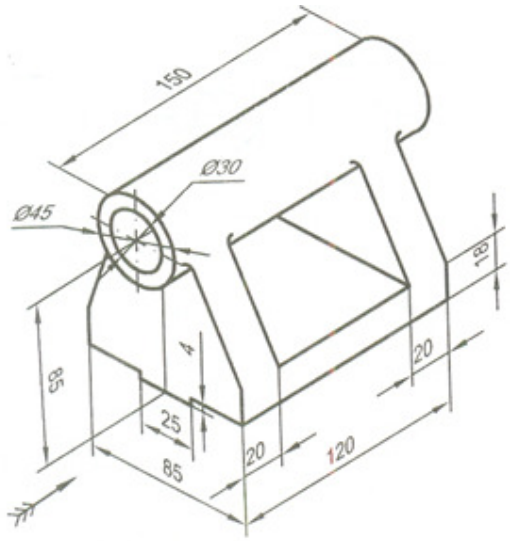

PART-B

2. (a) Inscribe a regular heptagon inside the given circle of 68mm diameter. [7]
   (b) Construct a hypocycloid, rolling circle 50mm diameter and directing circle 175mm diameter. Draw a tangent to it at a point 50mm from the centre of the directing circle. [7]

3. (a) Draw the projections of a 75mm long straight line in the following positions:
   (i) parallel to and 30mm above the HP and in the VP
   (ii) perpendicular to the VP; 25mm above the HP and its one end in the VP
   (iii) Inclined at 30^0 to the HP and its one end 20mm above it; parallel to and 30mm in front of the VP. [6]
   (b) Construct a diagonal scale of R.F=1/4000 to show meters and long enough to measure up to 500 meters. [8]

|''|''|||''|'''|||'|

Subject Code: R161113/R16 **Set No – 4**

4. The front view of a line AB measures 65mm and makes an angle of 45^0 with xy. A is in the HP and the VT of the line is 15mm below the HP. The line is inclined at 30^0 to the VP. Draw the projections of AB and find its true length and inclination with the HP. Also locate its H.T. [14]

5. Draw the projections of a regular hexagon of 25mm side, having one of its sides in the HP and inclined at 60^0 to the VP and its surface making an angle of 45^0 with the HP. [14]

6. Draw the projections of a cone, base 75mm diameter and axis 100mm long, lying on the HP on one of its generators with the axis parallel to the VP. [14]

7. Draw the isometric view: [14]